NOTES
1. PRIMARY UNITS ARE INCHES.
2. INTERPRET DRAWING IN ACCORDANCE WITH: ASME Y14.5M-2009.
3. DIMENSIONS APPLY AFTER FINISH.
4. INSPECTION DIMENSIONS (DIMENSIONS W/ ROUNDED BOXES SURROUNDING THEM OR ⚠) ARE REQUIRED FOR VENDOR PPAP AND RUGER INCOMING INSPECTION. FEATURE CONTROL FRAMES ATTACHED TO AN INSPECTION DIMENSION ARE CONSIDERED PART OF THE INSPECTION REQUIREMENT.

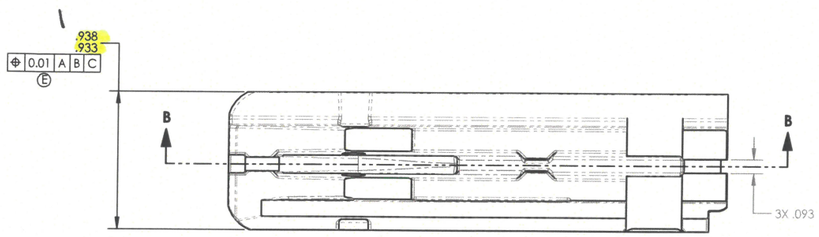

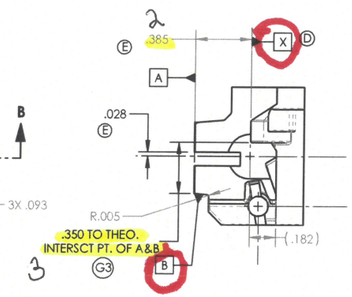

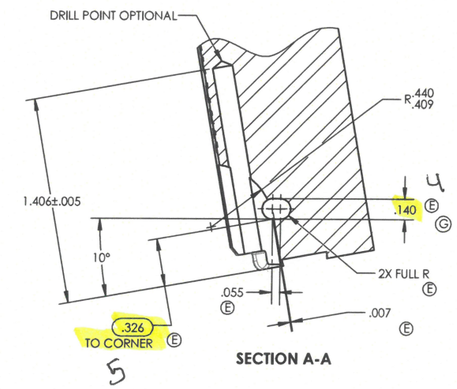

SECTION A-A

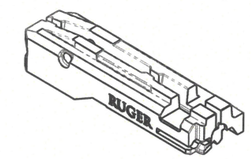

ISO VIEW
SCALE 1:1

REVISIONS				
ZONE	REV.	DESCRIPTION	DATE	ECO NUMBER
	A	RELEASE FOR PRODUCTION		2008-052
	B	1. .380/.383 WAS .375/.378 2. .309 WAS .312 3. .750 WAS .748 4. .250 WAS .245 5. .443 WAS .446 6. ADDED CARBURIZE CASE HDN. .005-.010 DEEP TO HEAT TREAT	4/9/2024	2009-165
A6, A8, C4	C	Ø.161/.157 WAS Ø.159/.157; Ø.306/.300 WAS R.153/.150; REMOVED .300 DIM; 2X .314 ±.002 WAS 3X .314 ±.002; ADDED .329 ±.002 DIM	4/9/2024	2021-128
A8, B1, B5, B6, B8, C4, C6, C7, C8, D4	D	ADD TABULATION AND CASTING DATUMS. ADD INSPECTION DIMENSIONS AND GD&T.	4/9/2024	2023-204
A2, B5, C3, C4, C6, C8, D3, D4, D5, D8	E	MATERIAL WAS 8620. HEAT TREAT WAS CARBURIZE. CASE HDN. .005-.010 DEEP 85 MIN. HR15N EXTRACTOR RETENTION FEATURE CHANGED TO POCKET FROM HOLE POSITION Ø.012" WAS Ø.006"	6/10/2024	2023-285
C7	F	1. Ø.1565-.1585 WAS Ø.157-.161	4/29/2025	2025-123
B2, B3, B4, C2, D3	G	ADDED CUT FOR SLING SHOT BOLT CATCH ADDED NEW VIEW FOR LEFT SIDE OF BOLT CHANGED .144 TO .140	8/5/2025	2025-213
C2	G-2	ADJUSTED DIMENSIONS AROUND SLING SHOT CUT	11/21/2025	
C5	G3	ADDED DIMENSION FROM B TO CAST SURFACE	12/8/2025	

PRELIMINARY PENDING ECO

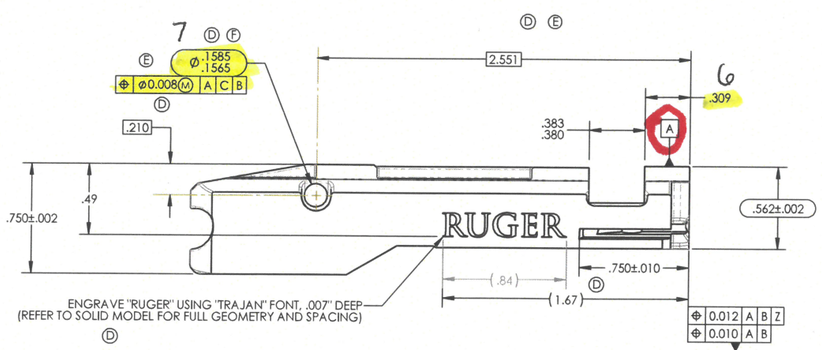

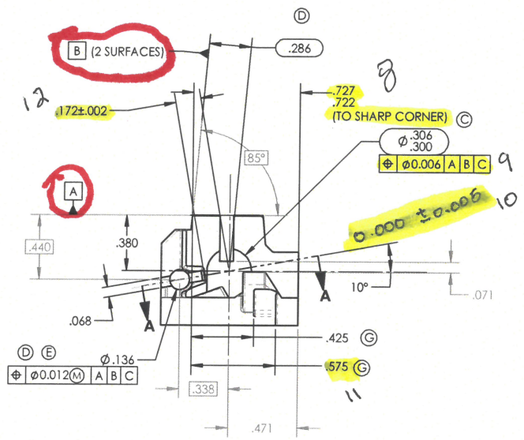

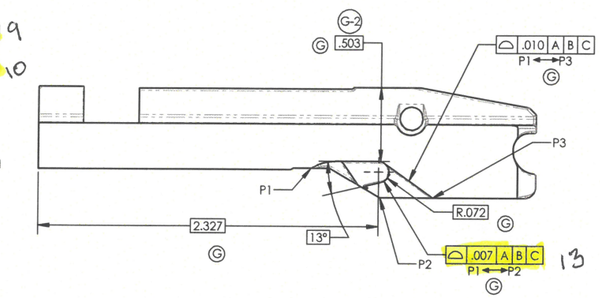

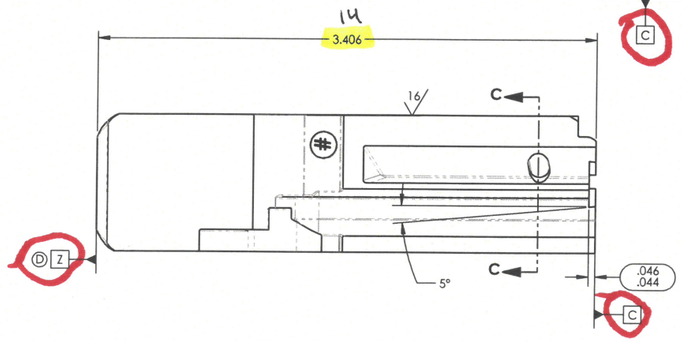

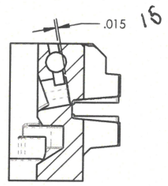

SECTION C-C

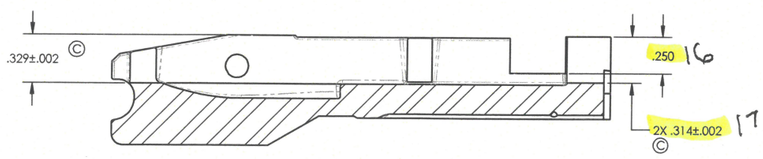

SECTION B-B

D

PART NUMBER	FINISH
B01002-BLU	BLACK OXIDE
B01002	N/A

UNSPECIFIED TOLERANCES:
.XX ±.01 FRACTIONS: ±1/64"
.XXX ±.005 ANGLES: ±1°
UNSPECIFIED RADII .010 MAX
BREAK ALL EDGES Ø.010 MAX OR .010 X 45°
MAX SURFACE FINISH 63 RA MICRO-INCH
THIRD ANGLE PROJECTION

STURM, RUGER & CO., INC.
NEWPORT, NH. 03773

DRAWN BY	L.STROBRIDGE	PRODUCT LINE	10/22
DATE	6/10/2024	PRODUCED FROM	B01001V
SCALE	2:1	USED ON	N/A
CAD NO.	B01002 Rev G-3	ASSEMBLY	BOLT ASSY
PART NAME	BOLT-MACH		SHT. 1 OF 1
DWG SIZE	D	PART NO.	B01002-TAB
REV.	G3		

MATERIAL: E 4140
HEAT TREATMENT: E HRC 36-42
FINISH: N/A

PROPRIETARY NOTICE
The information contained in this document is the sole property of Sturm, Ruger & Co., Inc. ("Ruger"). Any reproduction or transfer, in whole or in part, without the written permission of Ruger is prohibited.
This drawing is technical data whose export is restricted by federal law, including EAR (22 CFR Parts 120-130) or EAR (22 USC App. 2401 et. seq.) and may not be exported, released or disclosed to non-U.S. persons inside or outside of the United States without prior written authorization by the relevant US Government agency.

FILE NAME: B01002_B_Rev-G-2
CONFIGURATION NAME: Default